MAX75

Gearless High Speed Turbo Blower

Model MAX75-C150

Standard Specifications

Gas	Air Only
Flow Range	100% to 45% of Rated Flow*
Maximum Case Pressure	35 PSIG / 2.4 bar
VFD (integral)	Vacon, KEB, Yaskawa
Stages	Single Stage
Power Driver Options	Intregal Permanent Magnet Electric Motor
Cooling	Self Cooled Air Cooled
Bearings	NSTB+ Air Foil
Enclosure	Standard
Sound Level	75 dB @ 3 feet free field
Filtration Rating (std)	99% at 2 micron, or as required

Service

Air and Pressure

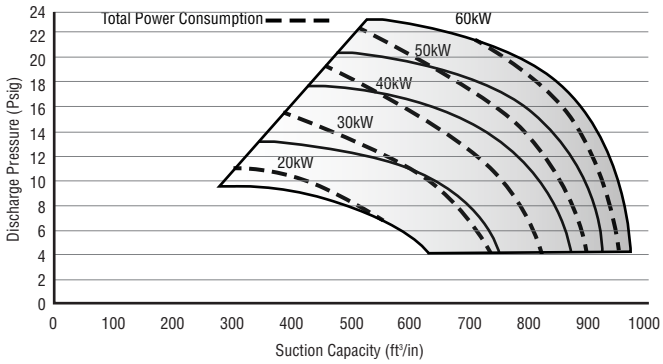

Control Options

Control Methods	Speed Control, Blow Off Control, Pressure, Flow
Local Controller	sLOC™ Standard - Custom for Allen Bradley, Modicon, Siemens or Other
HMI	sLOC™ Standard or Custom HMI
Remote Monitoring	sLINK™ or Custom
Control Set Points	Pressure, Flow, Power, Custom Input

Standard Materials of Construction

Casing	A356 Cast Aluminum
Volute	A356 Cast Aluminum
Bearings	Inconel with Teflon, Nano Silver Coatings
Impeller	5 Axis Machined anodized 7075 Aluminum
Shaft	Titanium alloy with Sm2C017 Magnets
Blower Base Skid	ASTM A36 Structural Steel
Isolation Pads	Adjustable Feet with Mounting Anchor
Finish	Powder Coated Cabinet

Optional Testing & Certifications

Electrical	UL 508A, UL 1450, CSA, CE, IEEE519
Hazardous Location	Not Classified
Balancing	ISO 1940 - G2.5, ~4W/N API
Noise Level	OSHA 1910.95, ISO 2151:2004
Performance Testing	ASME PTC-10, PTC-13, ISO 5389

Standard Options

- High and Low Ambient Temperature
- Sperated Electrical and Mechanical Enclosure
- Flanged Intake
- Outdoor Enclosure
- Dual and Duplex Options
- Harmonic Filter

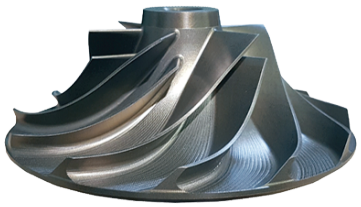

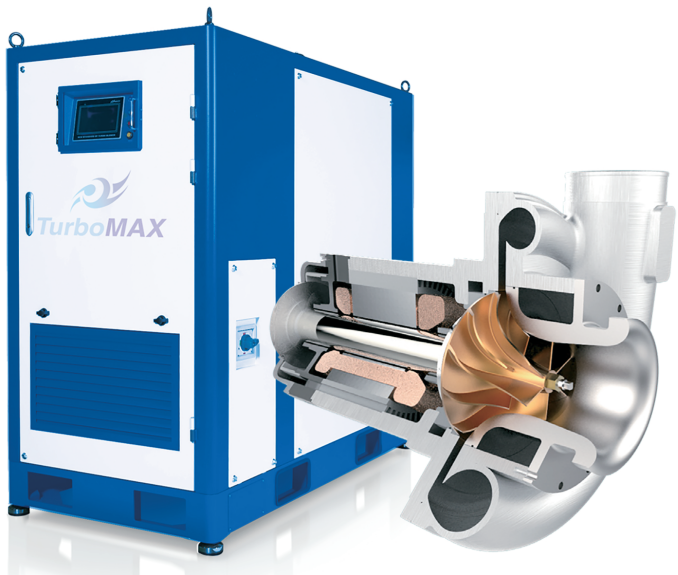

www.lonestarblower.com

** Information is approximate and can change without notice / * Performance Based on 1 Atm, 68F/20C, 36% RH and 3550 rpm*

REVISION HISTORY			
REV	DESCRIPTION	DATE	APPROVED

VIEW "E-E"
(LOOKING DOWNWARD)

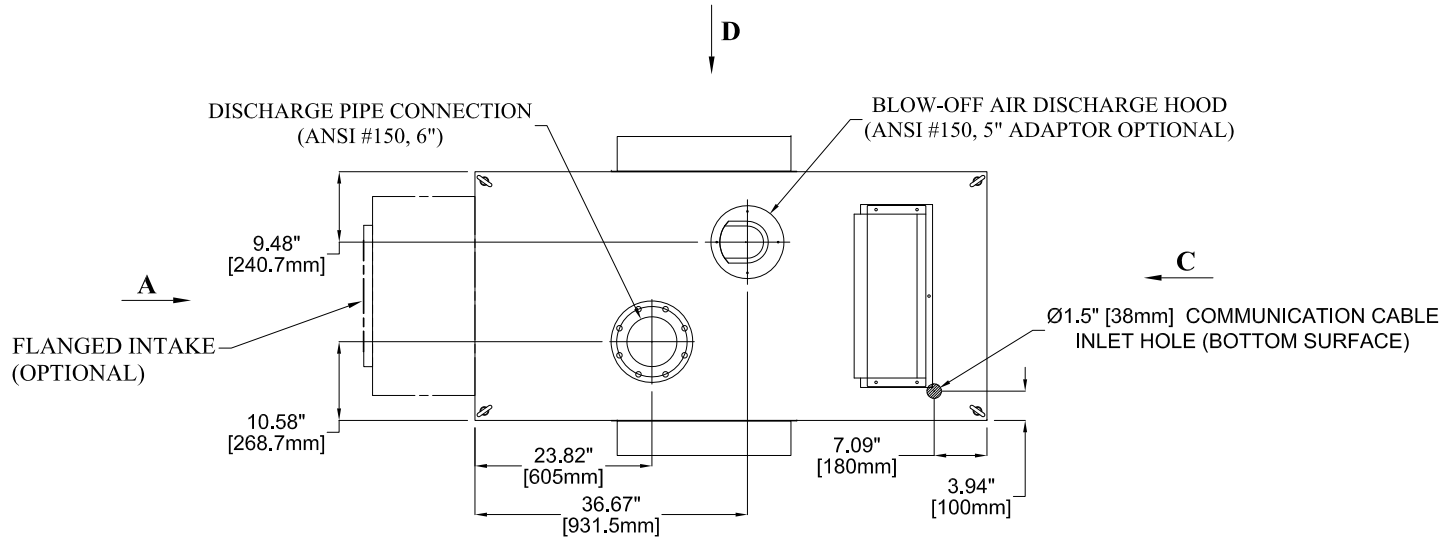

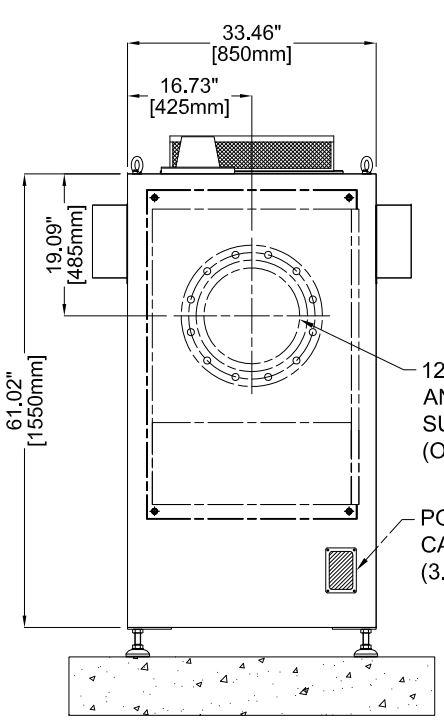

VIEW "A"
(REAR SIDE)

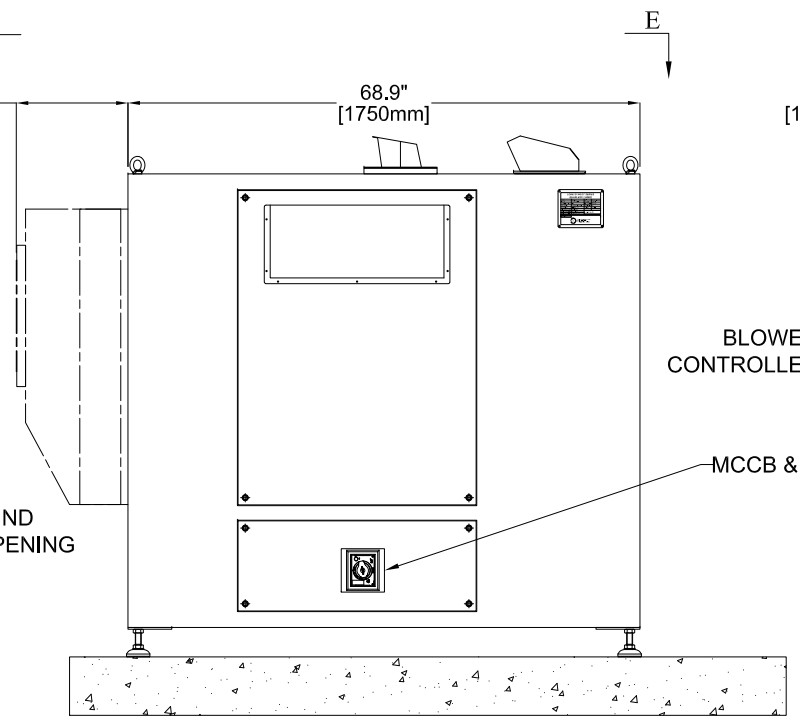

VIEW "B"
(LEFT SIDE)

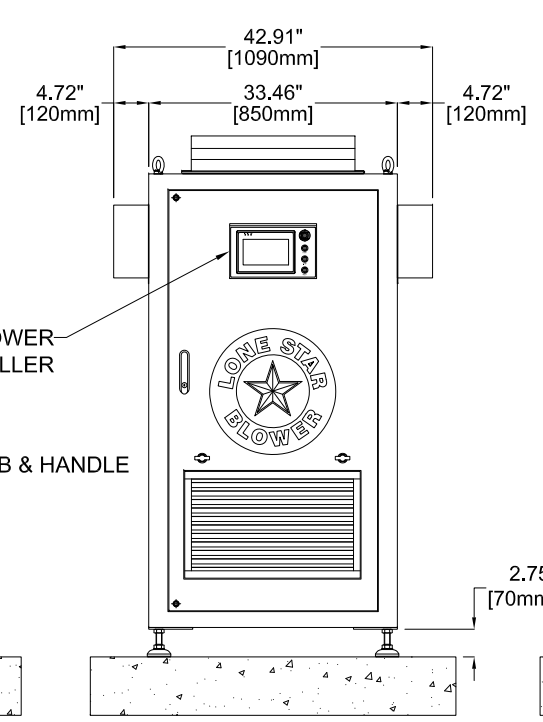

VIEW "C"
(FRONT SIDE)

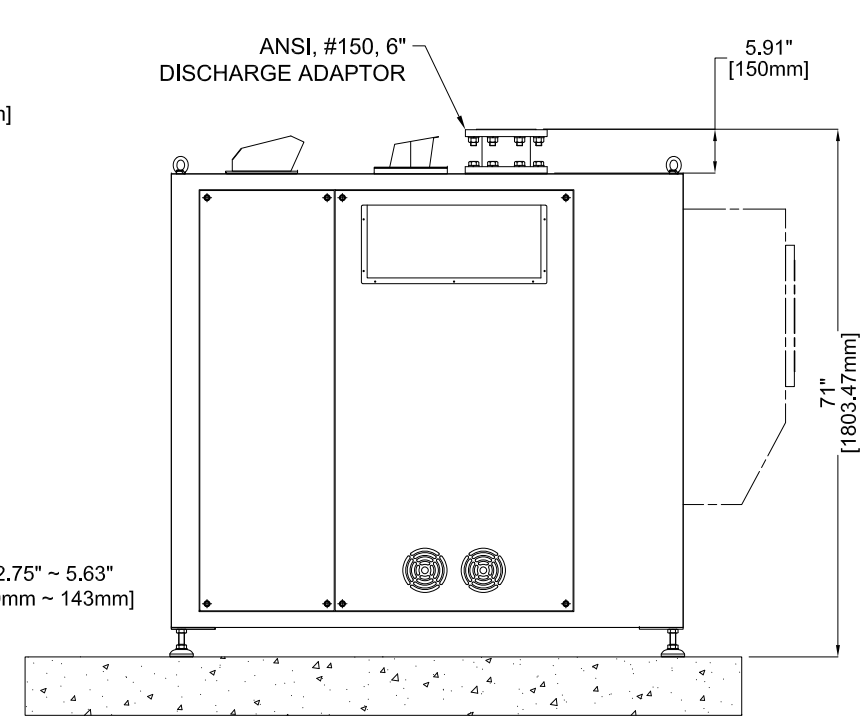

VIEW "D"
(RIGHT SIDE)

ALL DIMENSIONS ARE SUBJECT TO CHANGE WITHOUT NOTICE.
PLEASE CONSULT WITH LONE STAR PRIOR TO DESIGNING AROUND PARTICULAR EQUIPMENT.

MODELS	WEIGHT
MAX75-C150 LOUVER	1,543 LBS (700 KG)
MAX75-C150 FLANGED INTAKE	1,643 LBS (745 KG)

UNLESS OTHERWISE SPECIFIED
DO NOT SCALE

LONE STAR BLOWER PROPRIETARY RIGHTS ARE INCLUDED HEREIN. THIS INFORMATION MAY NOT BE COPIES, TRANSFERRED, OR DISCLOSED, EXCEPT AS AUTHORIZED BY LONE STAR BLOWER.

THIRD ANGLE PROJECTION

DRAWING IS FOR REFERENCE ONLY
UNLESS SPECIFIED AS RELEASED.

APPROVALS		
DRAWN	JMC	06/04/2021
CHECK		
ENGINEER		
MANUFACTURING		
CONTROL		
APPROVED		

LONE STAR

TITLE
DT SERIES
BLOWER MAX75–C150

SIZE	CAGE CODE	DWG NUMBER	REV
A	–	MAX75–C150	0
SCALE		SHEET 1 OF 1	