MC-7

Multistage Centrifugal Turbo Blower

Model MC-7

Standard Specifications

Gas	Air, Steam, H2S, Biogas, Fuel Gas, CO2, N2, LNG, Custom
Flow Range	100% to 45% of Rated Flow*
Pressure Range	15 PSIG / 1034 mbar Delta
Maximum Case Pressure	25 PSIG / 1.7 bar
Stages	1 to 10 (11 at 50Hz)
Drive Type	Direct Coupled, Belt Drive
Power Driver Options	Electric 2-Pole Motor, Steam Turbine, Combustion Engine
Cooling	Self Cooled Air, Integral Fan
Lubrication Options	Grease, Splash Lubricated Oil, or Mist Connections
Bearings	Anti-friction type AFBMA L10 up to 300,000 hrs
Enclosure	Optional
Sound Level	< 85 dba
Sound Level with Enclosure	Job Specific
Filtration Rating (std)	98% at 10 micron, or as required
Seals Air	Labyrinth Type
Seals Gas	Closed Grease with Stuffing Box, Carbon Ring with Purge, Custom Available
Shaft End Dimension	2.25 in (57 mm) diameter at coupling
Inlet / Outlet Flange Size	6" / 6" ASA 125# /ANSI 150# Drilling, Optional DIN 175 Adapter Flange

Control Options

Control Methods	Variable inlet valve, speed control, blow off, or combination
Local Controller	sLOC™ Standard - Custom for Allen Bradley, Modicon, Siemens or Other
HMI	sLOC™ Standard or Custom HMI
Remote Montioring	sLINK™ or Custom
Control Set Points	Pressure, Flow, Power, Custom Input

Standard Materials of Construction

Casing, Volute	ASTM A48 Class 25/30 Cast Iron, Ductile
Bearing Housings	ASTM A48 Class 25/30 Cast Iron, Ductile
Impeller	ASTM A365 T6 Cast Aluminun, ASTM AA-6061 Fabricated, Stainless
Shaft	ASTM A109 1045~, Stainless Steel
Seals Air	ASTM B86 Z25631 Zinc Alloy, Aluminum
Seals Gas	ASTM C695 Molded Graphite
Joint Sealing of Casings	RTV Silicon or O-Ring
Blower Base Skid	ASTM A36 Structural Steel
Isolation Pads	Neoprene Rubber
Finish	2 Part Epoxy Lone Star Blue RAL5005

Optional Testing & Certifications

API	API 617, API 672 Features
Electrical	UL 508A, CE, CSA
Hazardous Location	ATEX, Class1 - Division 1- Division 2, Zone 0-2
Balancing	ISO 1940, G2.5 grade
Noise Level	OSHA 1910.95, ISO 2151:2004
Performance	ASME PTC-10, PTC-13, ISO 5389
Hydro Testing	1.5 Time MAWP
Overspeed Testing	Optional
Positive Material ID	XRF, OES, Material Certification
NACE Compliance	Optional
Special Coatings	Optional

Service

Air, Gas, Pressure, Vacuum

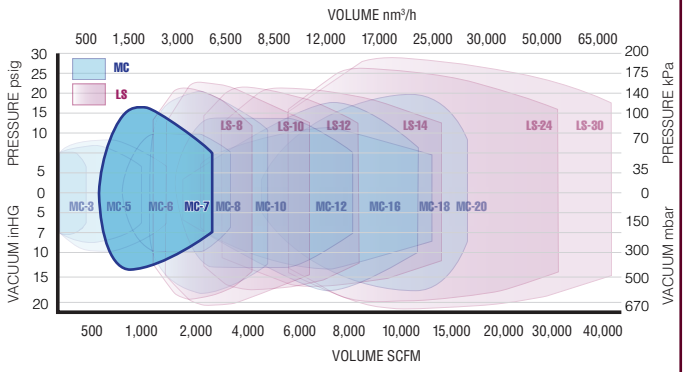

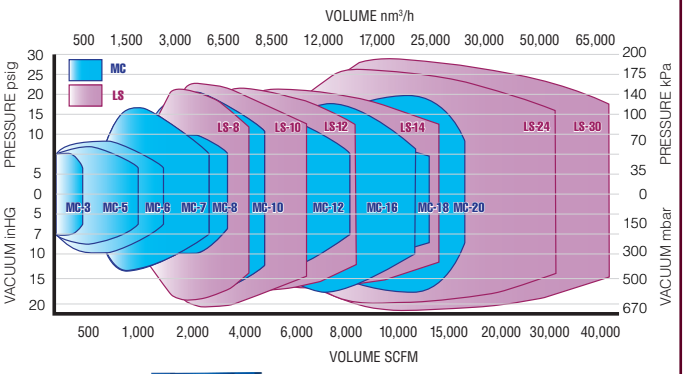

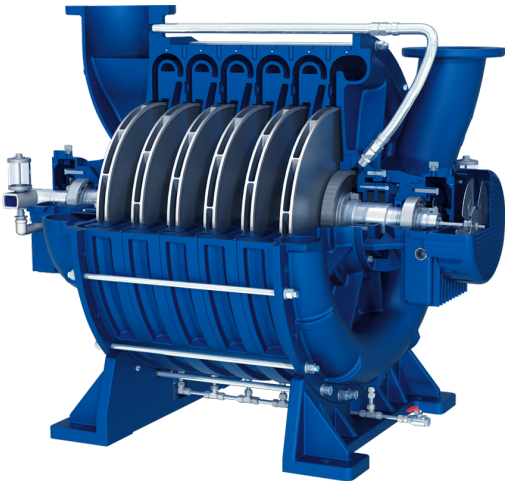

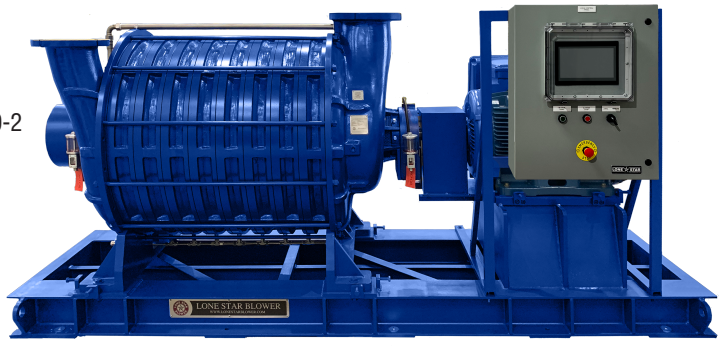

www.lonestarturbo.com

** Information is approximate and can change without notice / * Air Performance Based on 1 Atm, 68F/20C, 36% RH and 3550 rpm*

PACKAGED DIMENSIONS		
MODEL	A*	F*
MC7-1	48 (1219)	9.25 (235)
MC7-2	60 (1524)	12.87 (327)
MC7-3	60 (1524)	16.5 (420)
MC7-4	72 (1829)	20.12 (512)
MC7-5	72 (1829)	23.75 (604)
MC7-6	84 (2134)	27.37 (696)
MC7-7	84 (2134)	31 (788)
MC7-8	84 (2134)	34.62 (879)
MC7-9	96 (2438)	38.25 (1213)
MC7-10	108 (2747)	42.62 (1084)

*DIMENSIONS ARE SHOWN IN INCHES (AND MILLIMETERS) ARE APPROXIMATE.
DO NOT USE FOR CONSTRUCTION PURPOSES.
†DIMENSIONS VARY DEPENDING ON COUPLING & MOTOR FRAME SIZE.

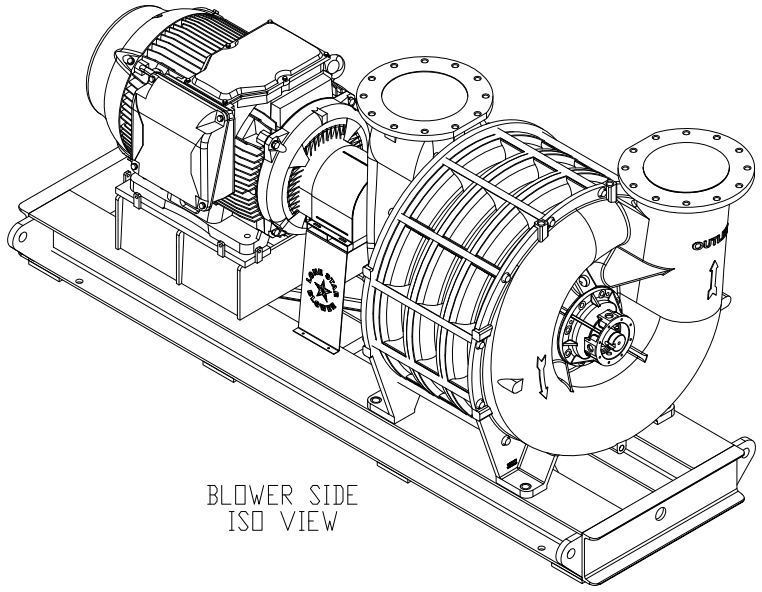

BLOWER SIDE
ISO VIEW

INLET & OUTLET ORIENTATION OPTIONS
THE ORIENTATION OF THE INLET AND OUTLET IS SELECTABLE FROM ANY OF THE THREE DIFFERENT POSITIONS, AS VIEWED WHEN FACING THE EXTERIOR OF THE PARTS.

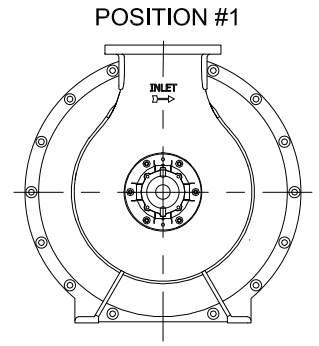

INLET VIEW

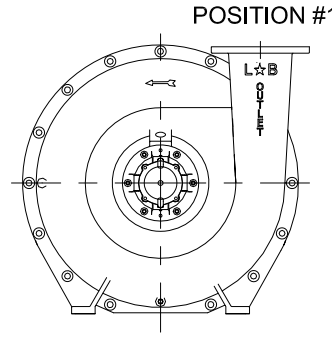

OUTLET VIEW

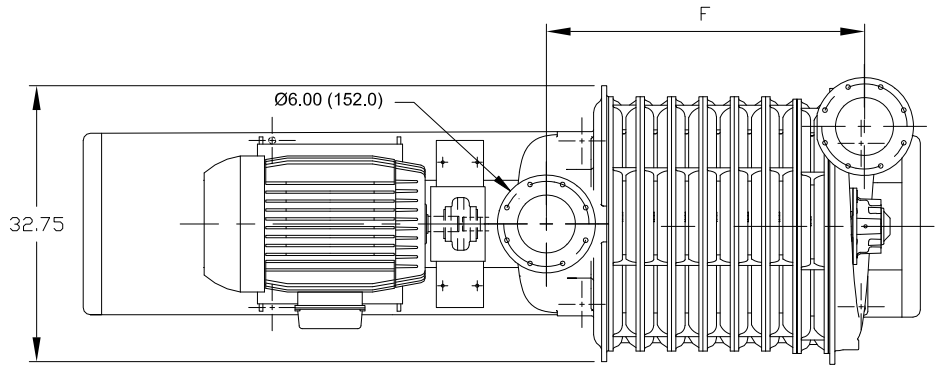

TOP VIEW

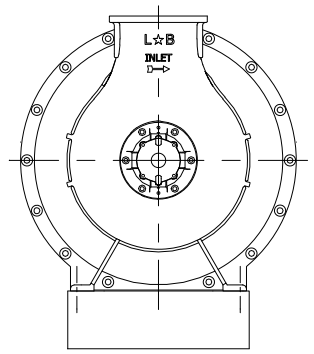

INLET VIEW

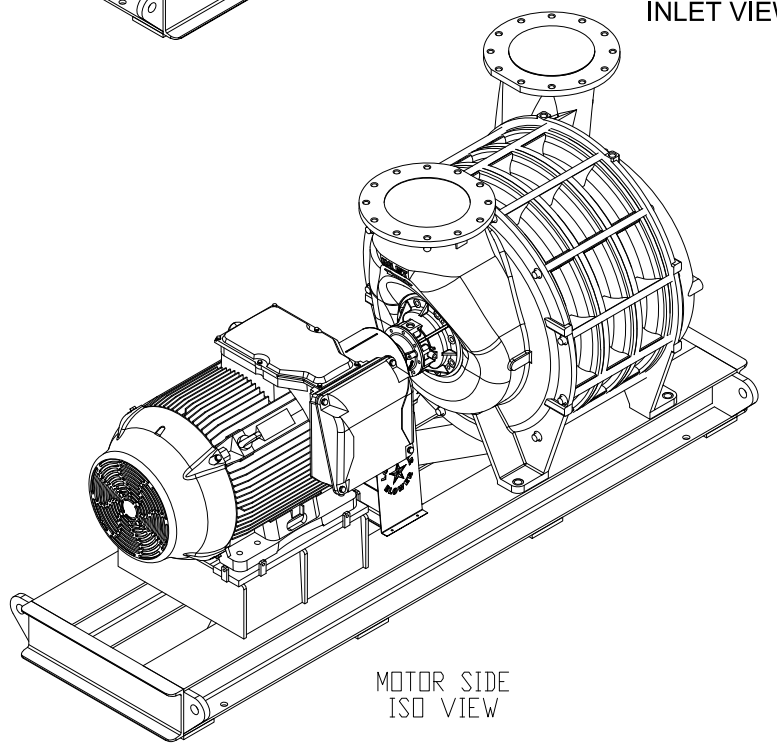

MOTOR SIDE
ISO VIEW

INERTIA BASED ON CAST IMPELLERS.
APPROXIMATE WEIGHT FOR BLOWER AND SKID MINUS MOTOR.

	WEIGHT		Wk²
MODEL	LB	Kg	LB-ft²
MC7-1	1250	567	8
MC7-2	1400	635	16
MC7-3	1550	703	23
MC7-4	1945	883	31
MC7-5	2120	962	39
MC7-6	2375	1077	48
MC7-7	2520	1143	54
MC7-8	2700	1225	60
MC7-9	2880	1306	69
MC7-10	3060	1388	77

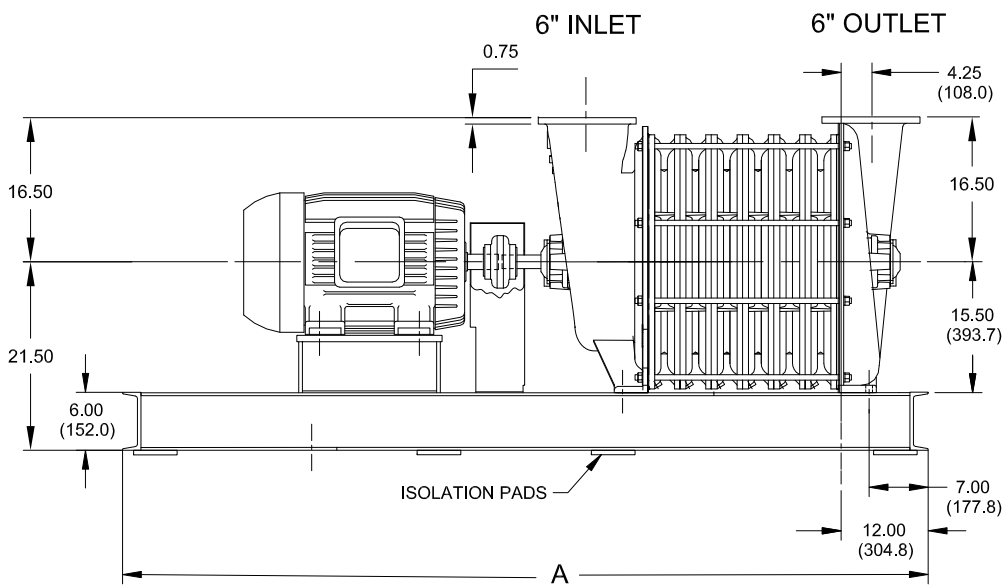

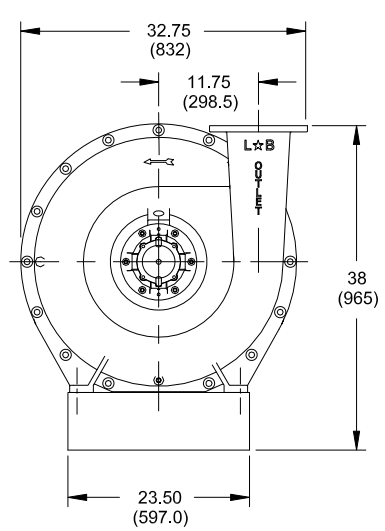

OUTLET VIEW

INTERPET ALL GEOMETRIC DIMENSIONING AND TOLERANCING TO ASME Y14.5

ALL DIMENSIONS ARE IN INCHES UNLESS OTHERWISE SPECIFIED

STANDARD TOLERANCES

.X	±.015
.XX	±.010
.XXX	±.005
X/X	±1/16
ANGLES	± 1°

REMOVE BURRS AND BREAK ALL SHARP EDGES
MACHINED SURFACES 125

DRAWING IS FOR REFERENCE ONLY UNLESS SPECIFIED AS APPROVED

THE INFORMATION CONTAINED IN THIS DRAWING IS THE SOLE PROPERTY OF LONE STAR BLOWER. ANY REPRODUCTION IN PART OR AS A WHOLE WITHOUT THE WRITTEN PERMISSION OF LONE STAR BLOWER IS PROHIBITED.

DRAWN BY	DATE
CHECKED BY	DATE
APPROVED BY	DATE

THIRD ANGLE PROJECTION

LONE STAR

MC 7
MULTISTAGE CENTRIFUGAL BLOWER

SIZE	DWG. NO.	REV
B	MARKETING	0
SCALE: 1:20	DO NOT SCALE	SHEET 1 OF 1